Panel Mount

KS34

Solid State Relay

Certificate
NO.: E365647

Certificate
NO.: CQC13001088066

Certificate
NO.: B110774964004

DESCRIPTION

KS34 is a high-power AC output panel mount type SSR with alternative DC or AC control. The DC input voltage range is 4~32VDC, and the AC input voltage range is 90~280VAC. The SSR offers five output current ratings from 40A to 125A and three output voltage options from 380VAC, 480VAC and 600VAC for selection. The SSR provides photoelectric isolation between input and output with dielectric strength 4000V and it is epoxy resin encapsulated with outline dimensions 58.6mmX45.7mmX28.7mm.

FEATURES

- Photoelectric isolation
- Removable protective cover
- Dielectric strength 4000V
- Zero-cross or random turn-on
- DC or AC control
- SCR output
- Green LED indicate

SELECTION GUIDE

KS34/	D-	38	Z	40	-Y	L	(XXX)
Type	Control voltage	Load voltage	Switching mode	Load current	Overvoltage protection	LED indicator	Customer special code
	D: 4～32VDC	38: 380VAC	Z: Zero-cross	40: 40A	Y: Included	L: Included	
	A: 90～280VAC	48: 480VAC	P: Random	60: 60A	Nil:		
		60: 600VAC		80: 80A	Not included		
				100: 100A			
				125: 125A			

Nots: (1) For SSRs with overvoltage protection function, the output will self-trigger when the load peak voltage reaches the protection value. Please refer to the overvoltage range for different loads as follows: 600~800VDC for D-38 type, 850~1200VDC for D-48/D-60 type. This SSR is not suitable for capacitive loads.

(2) Available parts are as below:

KS34/D-38□40-□L	KS34/D-38□60-□L	KS34/D-38□80-□L	KS34/D-38□100-□L	KS34/D-38□125-□L
KS34/D-48Z40-□L	KS34/D-48Z60-□L	KS34/D-48Z80-□L	KS34/D-48Z100-□L	KS34/D-48Z125-□L
KS34/D-60Z40-□L	KS34/D-60Z60-□L	KS34/D-60Z80-□L	KS34/D-60Z100-□L	KS34/D-60Z125-□L
KS34/A-38Z40-□L	KS34/A-38Z60-□L	KS34/A-38Z80-□L	KS34/A-38Z100-□L	KS34/A-38Z125-□L
KS34/A-48Z40-□L	KS34/A-48Z60-□L	KS34/A-48Z80-□L	KS34/A-48Z100-□L	KS34/A-48Z125-□L

(3) 40A-80A products are standard type, 100A-125A products are full potting type.

INPUT SPECIFICATIONS (Ta = 25°C)

Control voltage range (DC input)	4 ~ 32VDC
Control voltage range (AC input)	90 ~ 280VAC
Must turn-on voltage (DC input)	4 VDC
Must turn-on voltage (AC input)	90VAC
Must turn-off voltage (DC input)	1VDC
Must turn-off voltage (AC input)	10VAC
Max. input current (DC input)	25mA
Max. input current (AC input)	10mA
Max. reverse protection voltage (DC input type)	- 32VDC

OUTPUT SPECIFICATIONS (Ta = 25°C)

	A -38 D -38		A -48 D -48		D -60
Load voltage range	(48 ~440)VAC		(48 ~530)VAC		(48 ~660)VAC
Max. transient voltage	800Vpk		1200Vpk		1600Vpk
Load current range	40A	60A	80A	100A	125A
Max. surge current (10ms)	700Apk	900Apk	1250Apk	1250Apk	2250Apk
Max. I^2t for fusing (10ms, A^2s)	2450	4050	7800	7800	25000
Max. off-state leakage current	10mA				
Max. on-state voltage drop	1.7Vr.m.s.				
Min. power factor	0.5				
Max. turn-on time	Random (DC input)	1ms			
	Zero-cross (DC input)	1/2 Cycle + 1ms			
	AC input type	20ms			
Max. turn-off time	DC input type	1/2 Cycle + 1ms			
	AC input type	40ms			
Frequency range	(47 ~ 63)Hz				
Min. off-state dv/dt	500V/μs				

Note: IF customer requires min. off-state dv/dt achieving 1000V/μs,product can be customized.

GENERAL SPECIFICATIONS (Ta = 25°C)

Dielectric strength (50~60Hz)	input/output/base 2500VAC, 1min input/output 4000VAC, 1min
Insulation resistance	1000MΩ (500VDC)
Max. capacitance (input/output)	8pF
Operating Temperature	-30 ~ 80℃
Storage Temperature	-30 ~ 100℃
Ambient humidity	45% ~ 85% RH
Unit weight	40A,60A,80A Type Approx .95g
	125A Type Approx. 130g

PRECAUTIONS

1. Please pay special attention to the actual load current and the ambient temperature when doing the type selection. And the SSR requires proper heat sinking for heat dissipation in full load. For ambient temperature above 40°C, the load current must be derated. Please refer to the curve of Max. Load Current vs. Ambient Temperature for derating.
2. The heat produced by the SSR during the working process must be dissipated via the metal base of the SSR. Please coat the SSR metal base with some thermal grease or a thermal pad, and then firmly press the SSR against the heatsink to ensure the full adherence.
3. It is recommended to use the matched heatsink made by Keysolu. If the user needs to use the home-made heatsinks, please ensure that the temperature of the SSR base must not exceed 85°C.
4. Tighten the SSR screw terminals properly. If the screws are loose, the SSR would be damaged by heat generated from connection. Also excessive screw mounting torque may damage the SSR's internal components. Please refer to the recommended screw mounting torque as follows: the M4 screw mounting torque range is 0.98~1.37N·m, and the M3 screw mounting torque range is 0.58~0.98N·m.
5. For inductive loads, it is suggested to select the product with random turn-on (i.e. item number with letter P); for capacitive loads, please do not select the product with overvoltage protection (i.e. item number with letter Y).
6. The specified specifications are based on resistive loads. Please do not use the SSR exceeding the limitation which is specified on this datasheet.

OUTLINE DIMENSIONS, WIRING DIAGRAM AND MOUNTING HOLES LAYOUT

Unit: mm

Outline Dimensions

Standard type

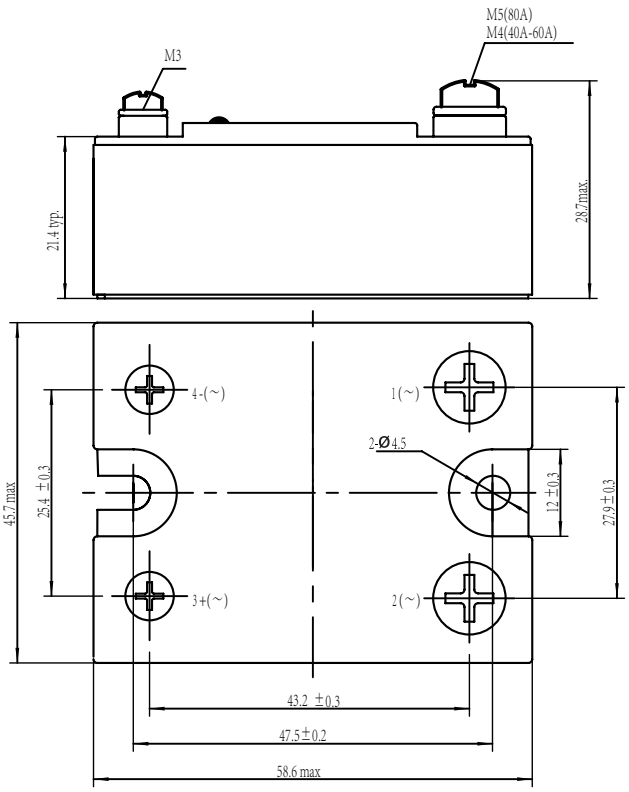

Full potting type

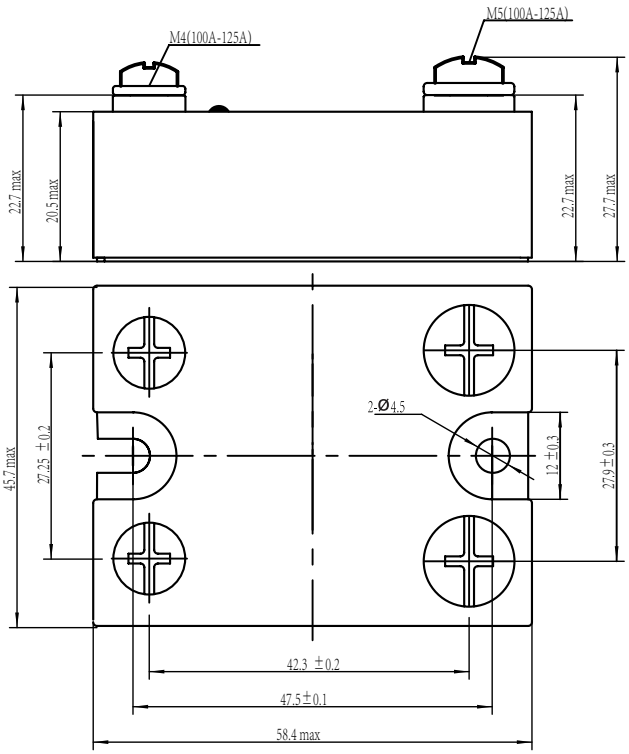

OUTLINE DIMENSIONS, WIRING DIAGRAM AND MOUNTING HOLES LAYOUT

Unit: mm

Wiring Diagram

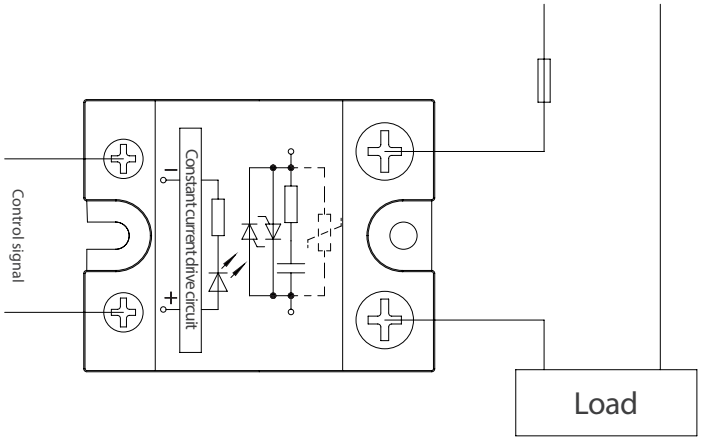

Mounting Holes

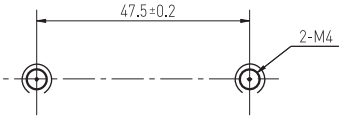

CHARACTERISTIC CURVES

Max. Load Current
vs. Ambient Temperature (40A)

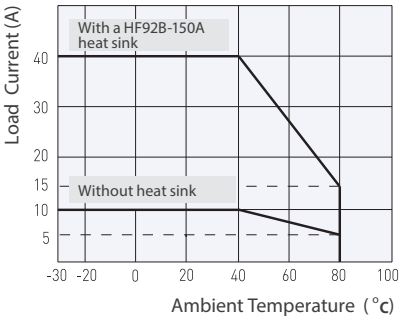

Max. Load Current
vs. Ambient Temperature (60A)

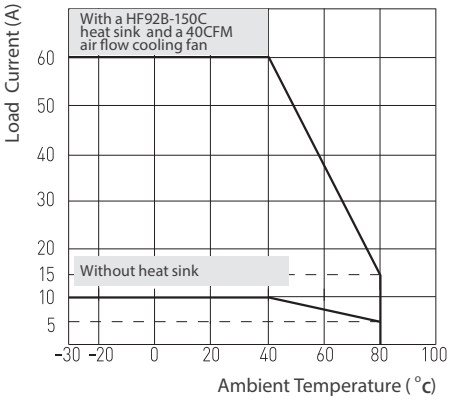

Max. Load Current
vs. Ambient Temperature (80A)

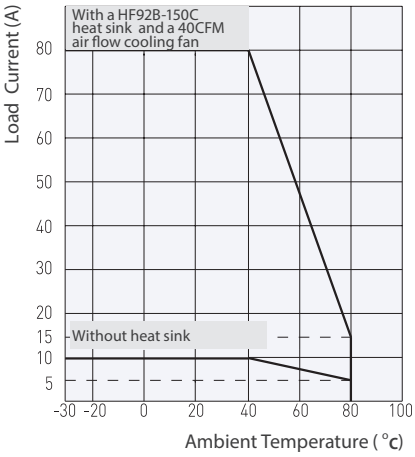

Max. Load Current
vs. Ambient Temperature (100A)

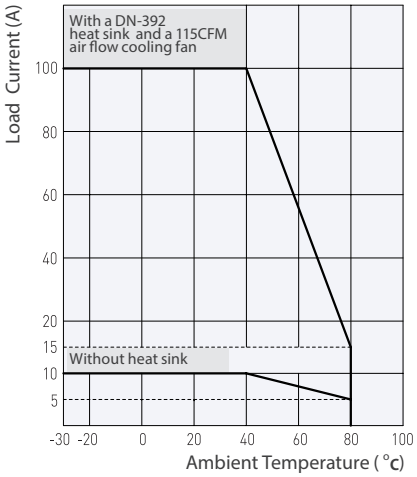

CHARACTERISTIC CURVES

Max. Load Current
vs. Ambient Temperature (125A)